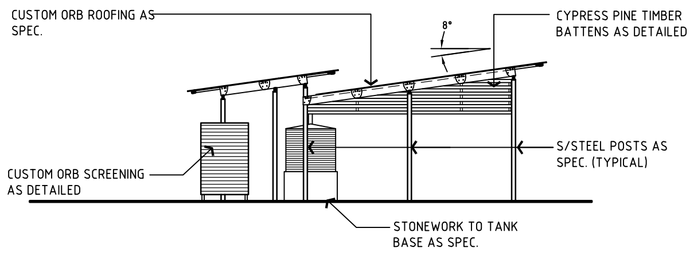

ELEVATION 1
SCALE 1:100

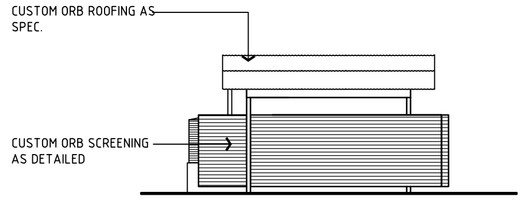

ELEVATION 2
SCALE 1:100

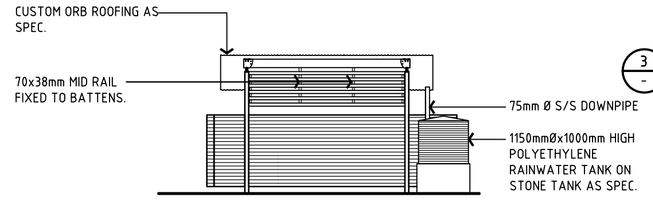

ELEVATION 3
SCALE 1:100

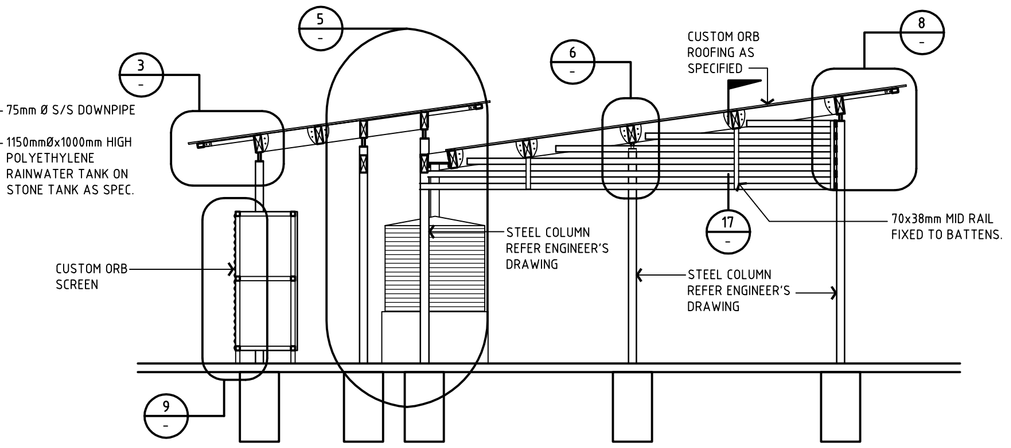

SECTION A
SCALE 1:10

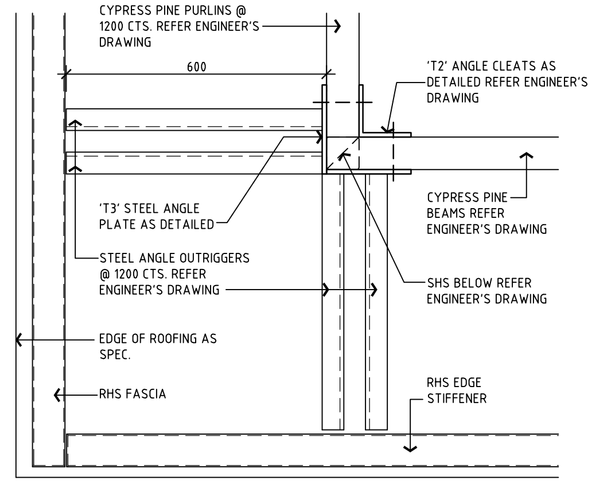

TYPICAL CORNER PLAN DETAIL
SCALE 1:10

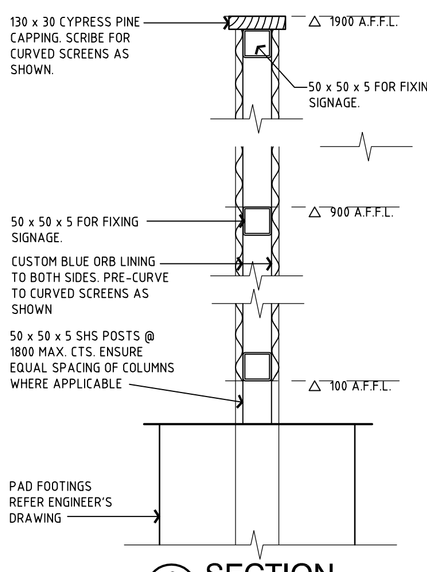

9 SECTION
SCALE 1:10

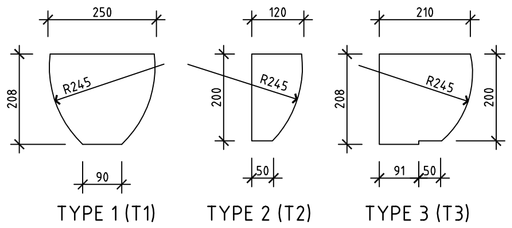

NOTE: REFER ENGINEER'S DRAWING FOR PLATE AND CLEAT THICKNESS AND COORDINATE SHAPE AS DETAILED

2 PLATE / CLEAT DETAILS
SCALE 1:10

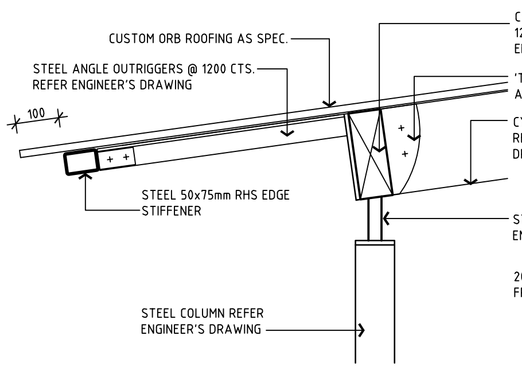

3 SECTION DETAIL
SCALE 1:10

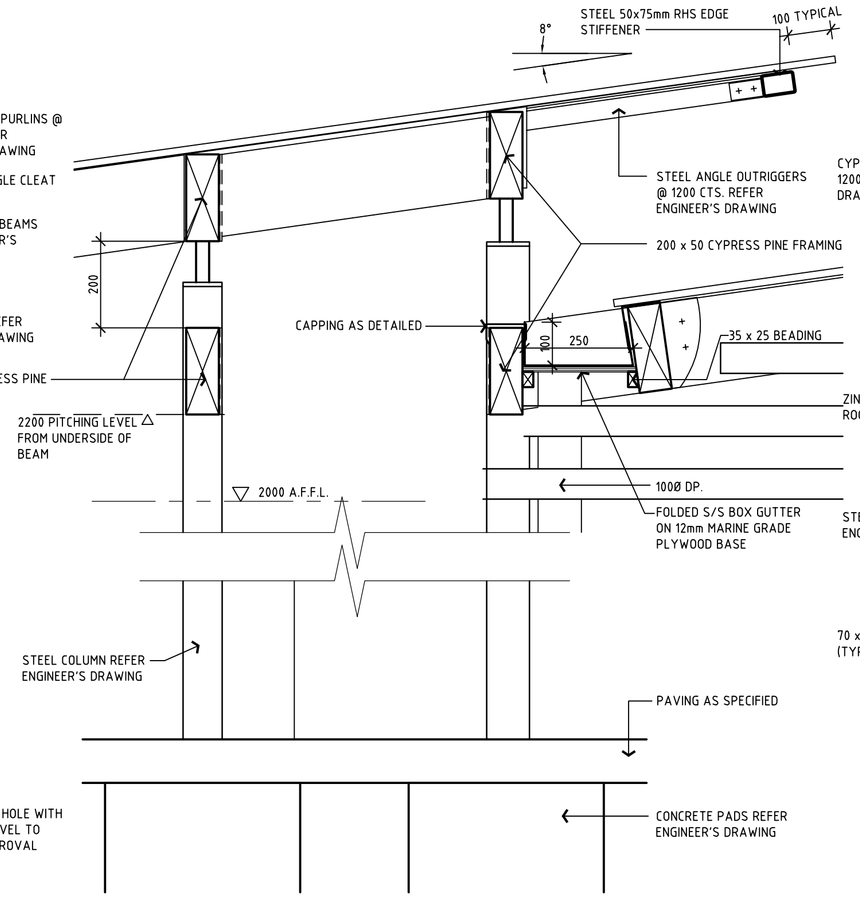

5 SECTION DETAIL
SCALE 1:10

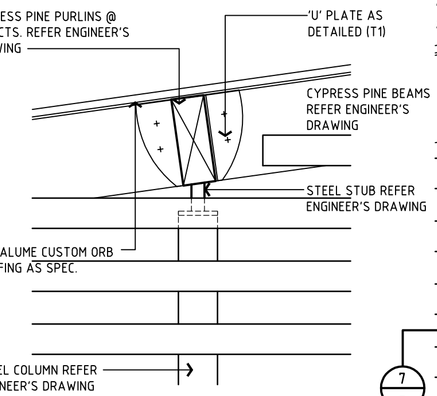

6 SECTION DETAIL
SCALE 1:10

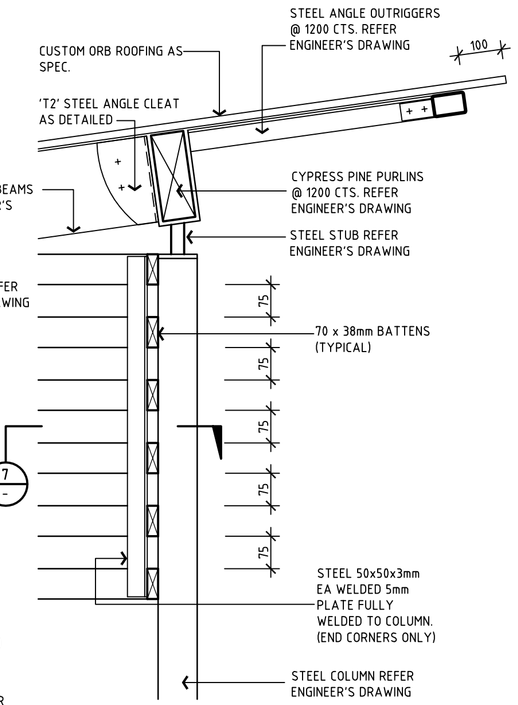

8 SECTION DETAIL
SCALE 1:10

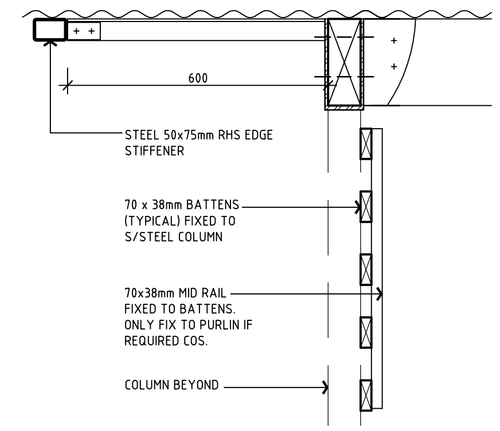

14 SECTION DETAIL
SCALE 1:10

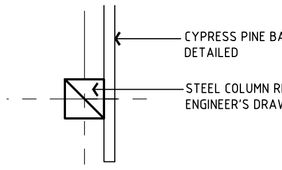

TYPICAL PLAN DETAIL
SCALE 1:10

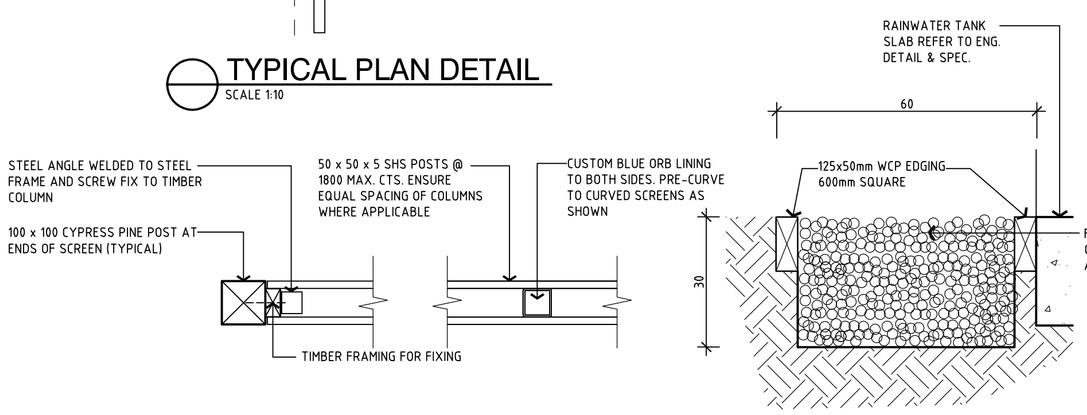

TYPICAL SCREEN DETAIL
SCALE 1:10

DRAINAGE PIT SECTION DETAIL
SCALE 1:10

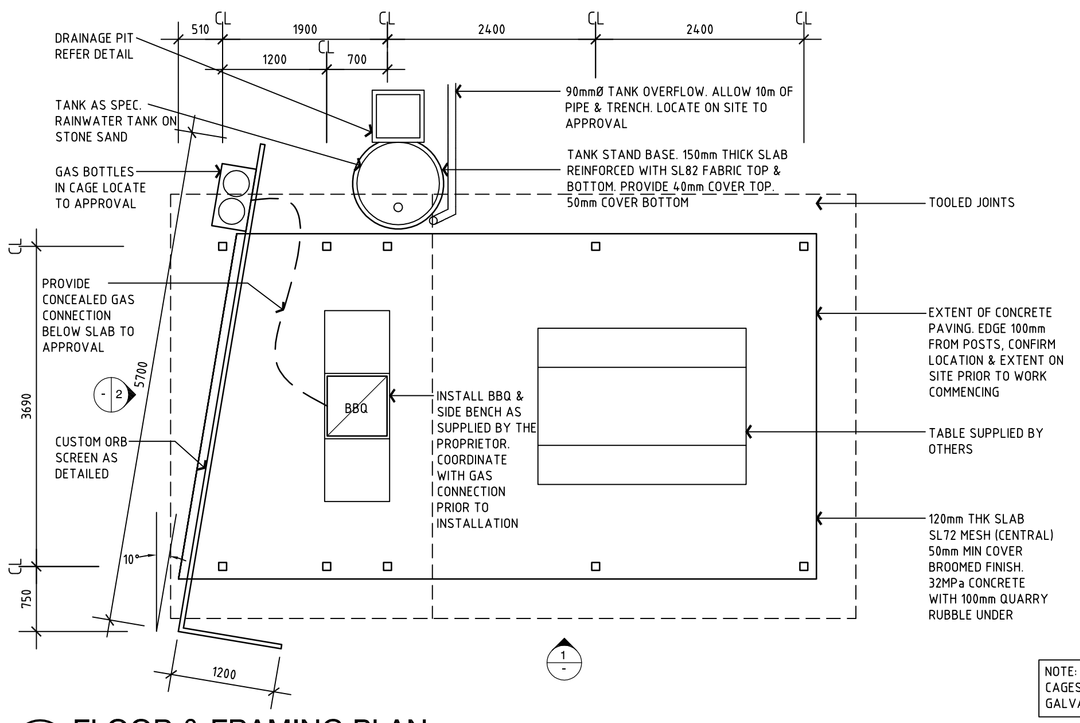

FLOOR & FRAMING PLAN
SCALE 1:50

Scale 0 .50 1 2 3 1:50

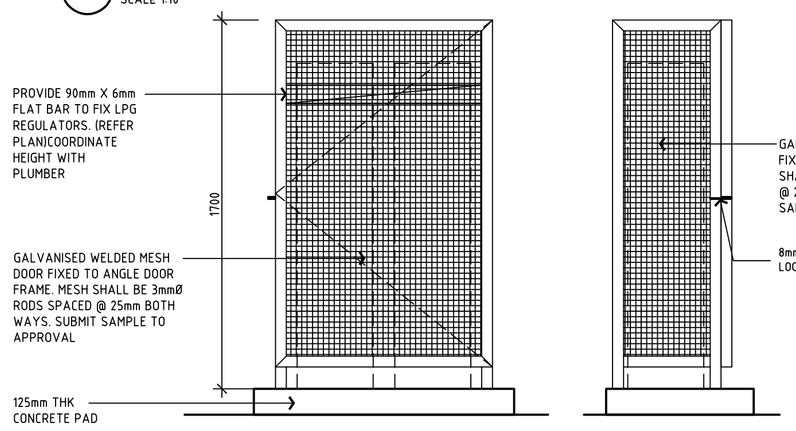

ELEVATION
SCALE 1:20

ELEVATION
SCALE 1:20

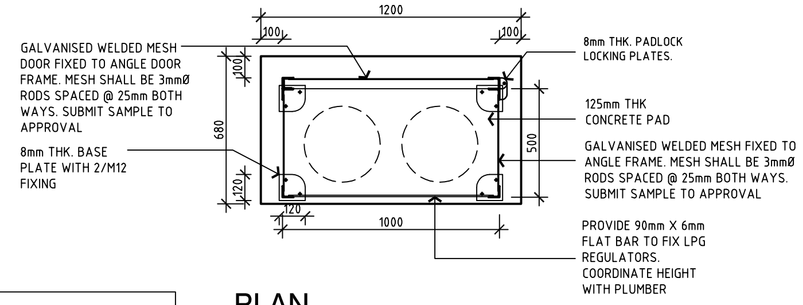

NOTE:
CAGES TO BE HOT DIPPED GALVANISED AFTER FABRICATION

PLAN
SCALE 1:10

GAS BOTTLE ENCLOSURE DETAIL

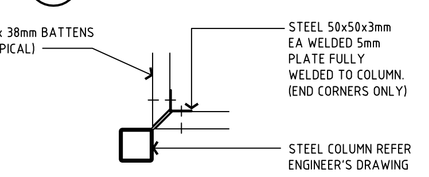

7 PLAN DETAIL
SCALE 1:10

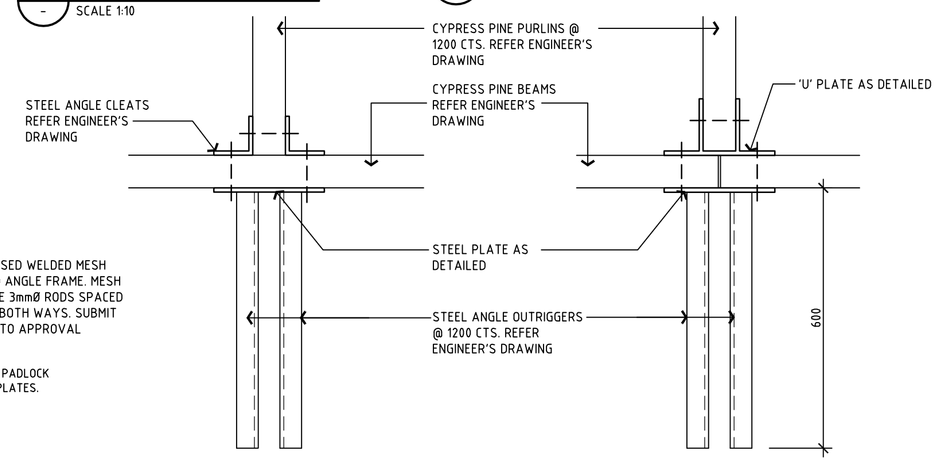

10 PLAN DETAIL
SCALE 1:10

11 PLAN DETAIL
SCALE 1:10

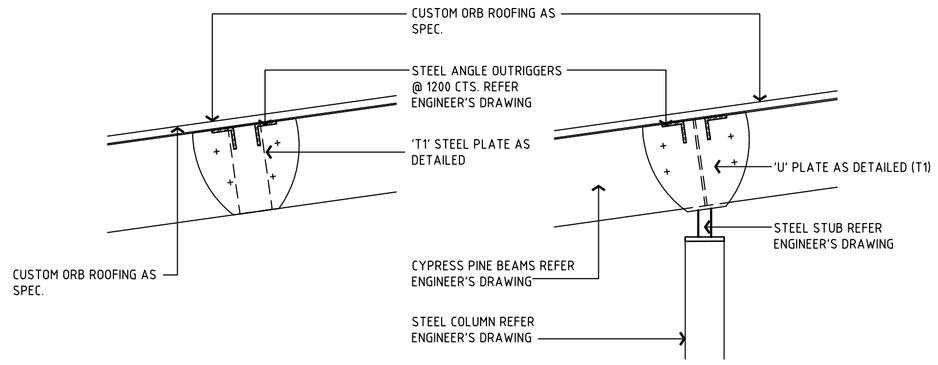

12 ELEVATION DETAIL
SCALE 1:10

13 ELEVATION DETAIL
SCALE 1:10

(TYPICAL COLUMN, LINTEL, PURLIN, OUTRIGGER CONNECTION DETAIL)

LEGEND

WCP WHITE CYPRESS PINE TIMBER AS SPECIFIED
S/S STAINLESS STEEL AS SPECIFIED

GENERAL NOTES

1. PEG LOCATION OF ALL SITES FOR SINGLE INSPECTION PRIOR TO WORK COMMENCING. ALLOW FOR RE-PEG IF REQUIRED
2. MINIMAL CLEARANCE OF VEGETAION & NO VEGETATION SHALL BE REMOVED WITHOUT PERMISSION OF THE PROPRIETOR

TIMBER
1. ALL TIMBER SHALL BE ROUGH SAWN WHITE CYPRESS PINE AS SPECIFIED.
2. ALL TIMBER TO BE UNPAINTED UNLESS NOTED OTHERWISE, & NO SAPWOOD ALLOWED IN MEMBERS.

FASTENERS
1. ALL FASTENERS TO BE STAINLESS STEEL
2. ALL STEEL WORK TO BE HDG & PAINTED AS SPEC

Issue	Date	Revision/Description	Drawn	Appvd
B	24.08.07	REVISED ISSUE	MW	
A	11.07.05	TENDER ISSUE	JL	

SHANNON ARCHITECTS

PROPOSED VISITORS FACILITIES FOR KANGAROO ISLAND COUNCIL

SCALES AS SHOWN DRAWN MW DATE 24/08/07

DRAWING PLANS, ELEVATIONS, SECTIONS, DETAILS

DRAWING No 04051-1 B

43 Glen Osmond Road Eastwood SA 5063 Telephone 08 8373 1644 Facsimile 08 8373 1611

© RJ Shannon Pty Ltd ACN 007 998 067

AS COPYRIGHT OF ALL DRAWINGS AND DOCUMENTS AND OF THE WORKS EXECUTED FROM THEM IS VESTED IN THE ARCHITECT. THE USE THEREOF IS RESTRICTED TO THE PRESENT EXTENT INDICATED FOR THE PARTICULAR PROJECT AND TO THE SITE FOR WHICH AND TO THE PERSON FOR WHOM THEY WERE ORIGINALLY PREPARED. USE OTHERWISE THAN IN ACCORDANCE HEREWITH IS PROHIBITED. BUILDER MUST VERIFY ALL DIMENSIONS AT JOB BEFORE COMMENCING WORK OR SHOP DRAWINGS.