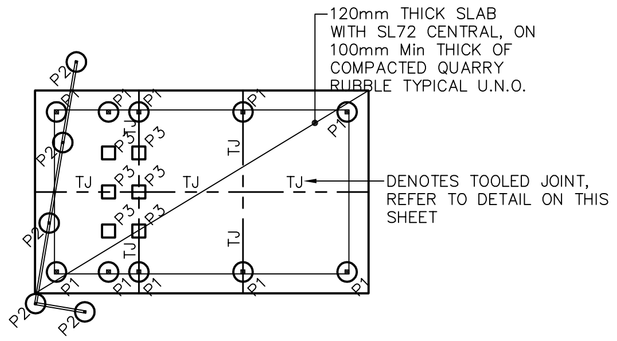

VISITORS FACILITIES FOOTING PLAN.

1:100

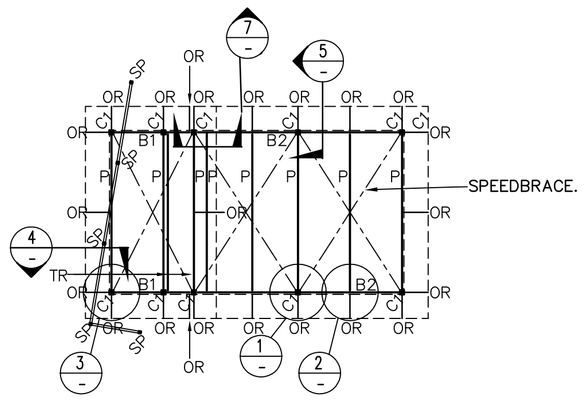

VISITORS FACILITIES ROOF PLAN.

1:100

FOOTING SCHEDULE

TYPE	SIZE	REMARKS
P1	450 DIA. x 900 DEEP	BORED PIER.
P2	450 DIA. x 700 DEEP	BORED PIER.
P3	300 SQU. x 120 DEEP	PADS FOR TABLE LEGS. REFER TO ARCH. PLANS FOR LOCATIONS.
ALTERNATIVE PAD SIZES		
TYPE	SIZE	REMARKS
P1	600 SQU. x 750 DEEP	SQUARE PAD.
P2	500 SQU. x 600 DEEP	SQUARE PAD.

MEMBER SCHEDULE

TYPE	SIZE	REMARKS
B1	200x50	(BEARER). F5 CYPRESS PINE
B2	200x50	(BEARER). F5 CYPRESS PINE
P	200x50	(PURLIN). F5 CYPRESS PINE
OR	2/50x50x5 EA	(OUTRIGGERS)
TR	200x50	(TRIMMER FOR SUPPORT OF CHIMNEY). F5 CYPRESS PINE
C1	100x100x2 SHS	(COLUMN). STAINLESS STEEL.
SP	50x50x5 SHS	(SCREEN POST).

STEELWORK NOTES.

S1. PROVIDE A MINIMUM OF 6mm CONTINUOUS CATEGORY 'SP' FILLET WELD AROUND ALL EDGES OF STEEL IN CONTACT. (UNLESS NOTED OTHERWISE)
S2. PROVIDE A MINIMUM OF 2M12 BOLTS PER CONNECTION FOR ANY MEMBER
S3. ALL STEELWORK TO HOT DIPPED GALVANISED, UNLESS STAINLESS STEEL

GENERAL NOTES.

G1. SCALES ARE AS SHOWN.
G2. DO NOT SCALE THIS DRAWING.
G3. ALL DIMENSIONS SHOWN ARE IN MILLIMETRES.
G4. REFER TO THE ARCHITECTURAL DRAWINGS FOR SETTING OUT.
G5. READ THIS DRAWING IN CONJUNCTION WITH THE SPECIFICATION
G6. CONTRACTOR TO VERIFY ALL DIMENSIONS ON SITE.

CONCRETE NOTES.

C1. CONCRETE SHALL BE:
.....N25 FOR PADS (20mm AGGREGATE, 80mm SLUMP)
.....N32 FOR SLAB (20mm AGGREGATE, 80mm SLUMP)
C2. CONCRETE COVER SHALL BE AS FOLLOWS.
.....SLABS.....40mm TOP
.....FOOTINGS PROTECTED BY PLASTIC.....50mm
.....FOOTINGS CAST AGAINST GROUND.....65mm
C3. LAPS TO REINFORCEMENT SHALL BE AS FOLLOWS:
.....N20.....1300mm
.....N16.....950mm
.....N12.....700mm
.....FABRIC.....ONE MESH + 25mm.

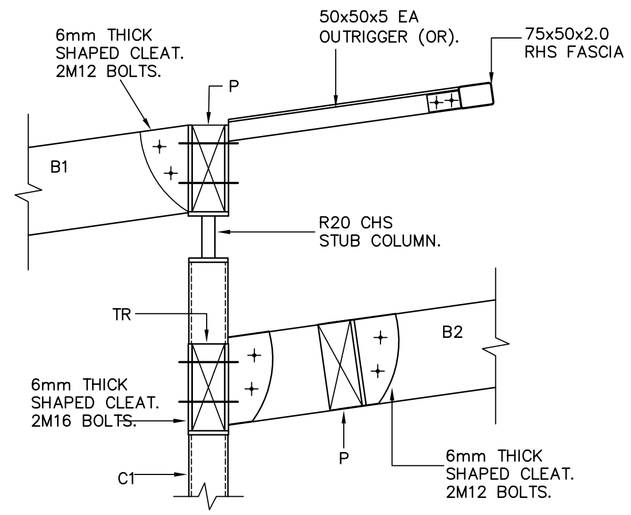

SECTION 7 / 1:10

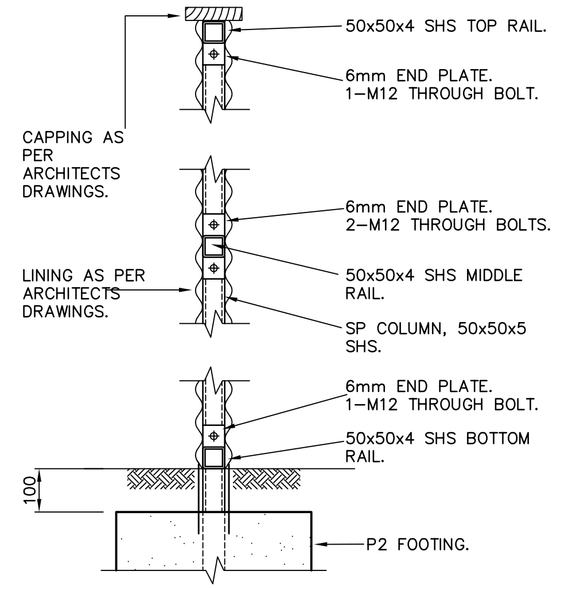

TYP. DETAIL AT SP.

1:10

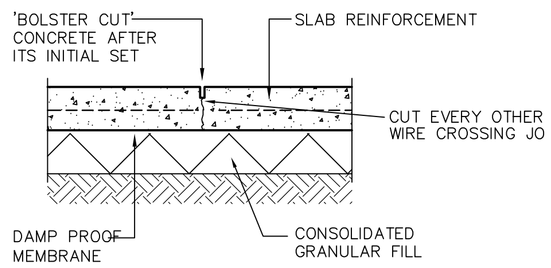

TOOLED JOINT

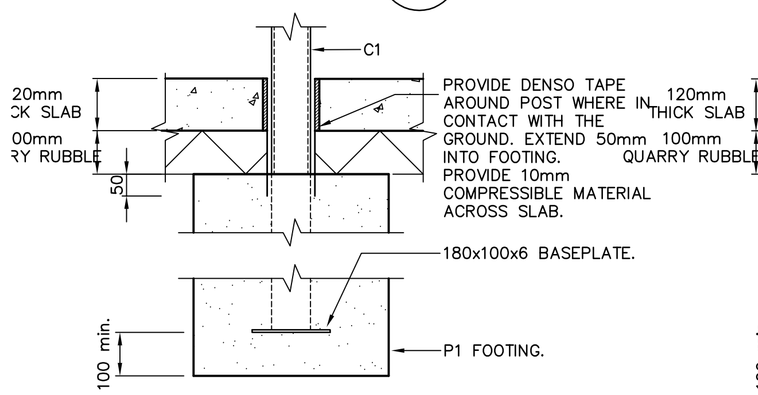

TYP. FOOTING DETAIL AT P1.

1:10

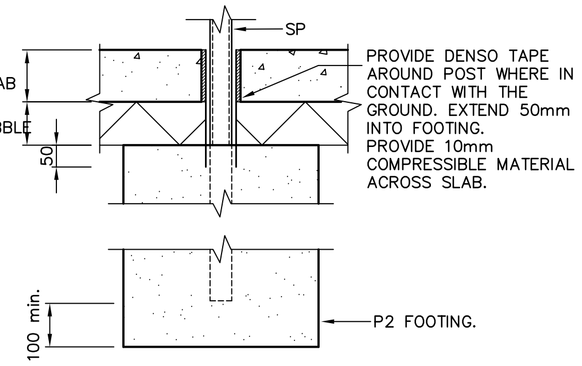

TYP. FOOTING DETAIL AT P2.

1:10

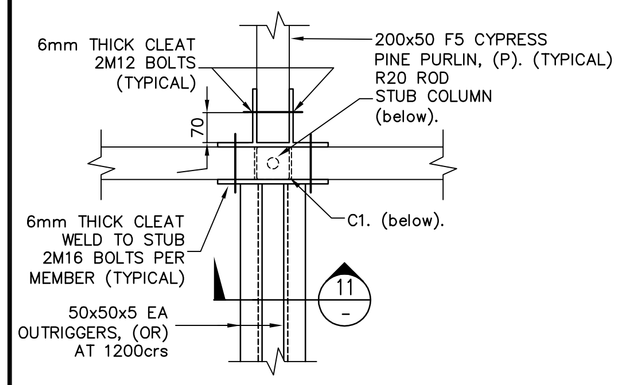

PLAN DETAIL 1 / 1:10

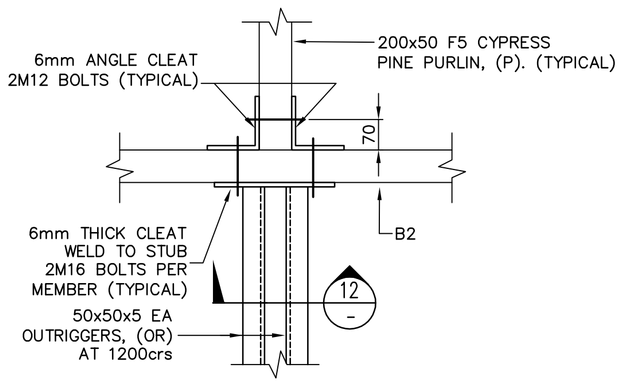

PLAN DETAIL 2 / 1:10

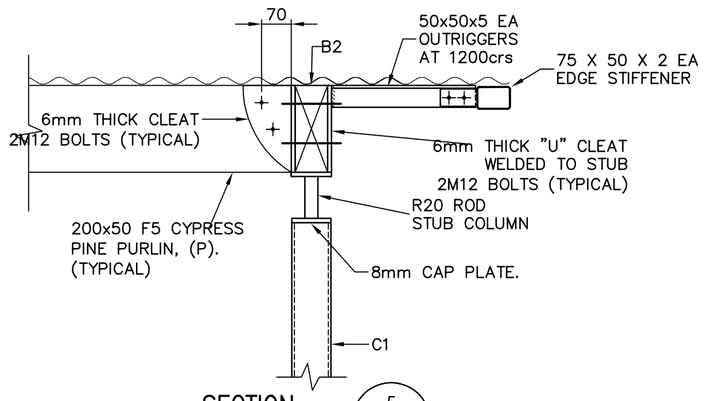

SECTION 5 / 1:10

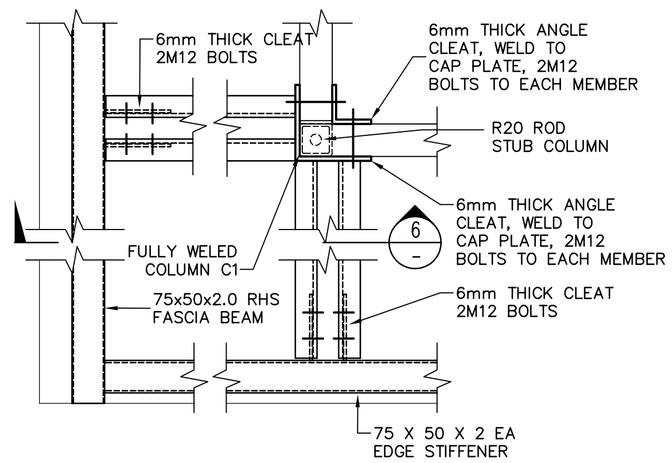

PLAN DETAIL 3 / 1:10

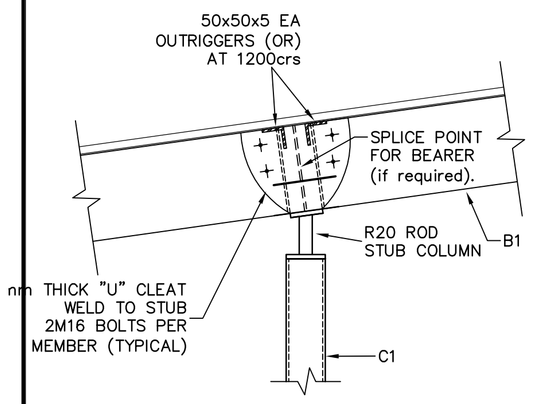

SECTION 11 / 1:10

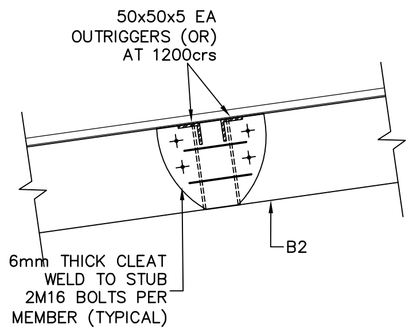

SECTION 12 / 1:10

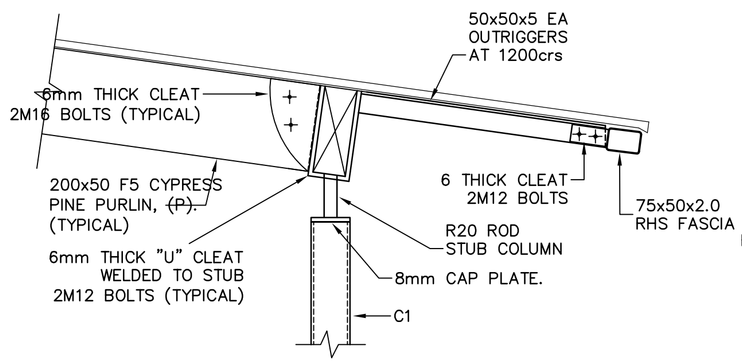

SECTION 4 / 1:10

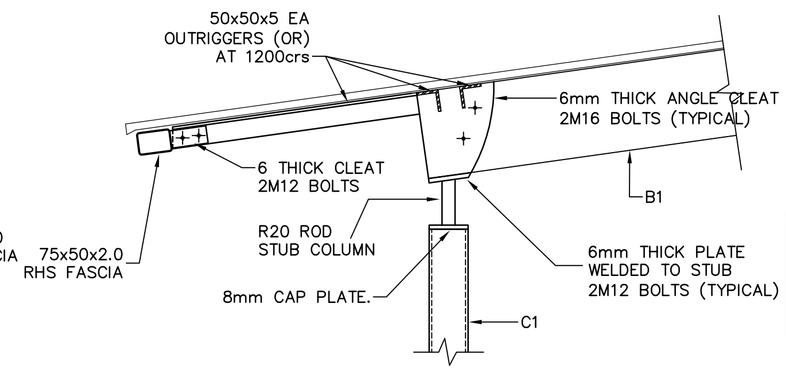

SECTION 6 / 1:10

IF IN DOUBT ASK ....

ISSUE	INIT.	REVISION	DATE
A	R.L.		8.07.05

BASTICK LLEWELLYN
CONSULTING ENGINEERS
CONSULTING STRUCTURAL AND CIVIL ENGINEERS
2 CLARKE STREET, NORWOOD, S.A. 5067
Ph..... (08) 8364 1544 Fax..... (08) 8364 1387
bl@bastickllewellyn.com.au

PROPOSED BARBECUE SHELTER
FOR KANGAROO ISLAND COUNCIL
KANGAROO ISLAND

FOOTING & ROOF FRAMING SECTIONS AND DETAILS

DATE DRAWN	SCALES.	SHEET SIZE	DRAWING NUMBER.	ISSUE
JULY 05	1:100 1:10	A1	05160-VF-01	A
ENGINEER G PETROVA	DRAWN BY M RICHARDS			