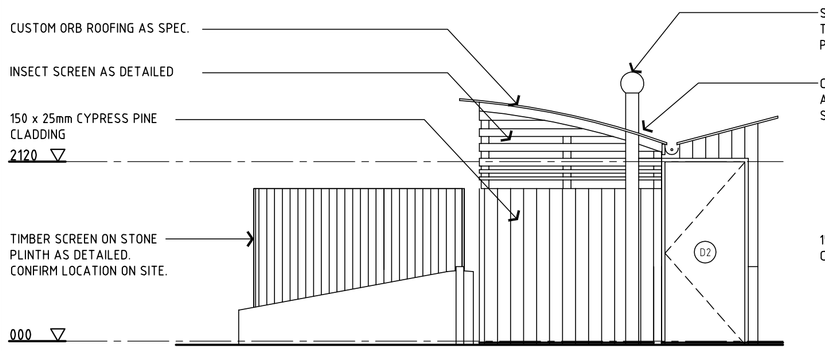

ELEVATION 1 (RAINWATER TANK OMITTED)
SCALE 1:50

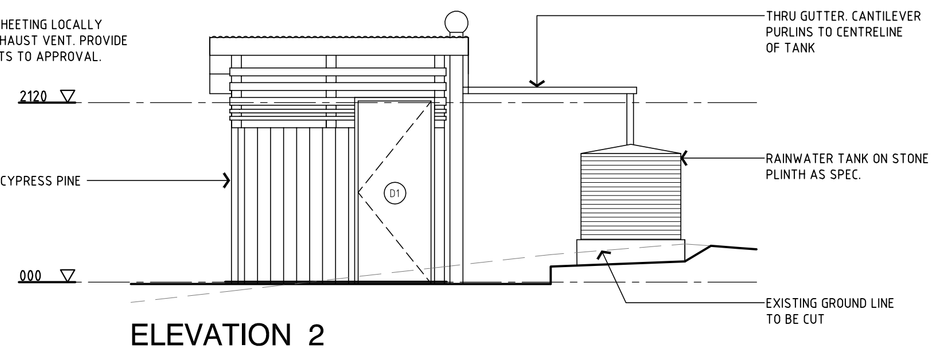

ELEVATION 2
SCALE 1:50

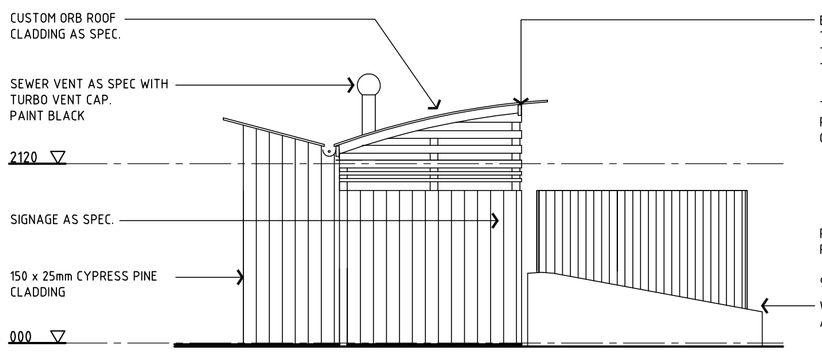

ELEVATION 3
SCALE 1:50

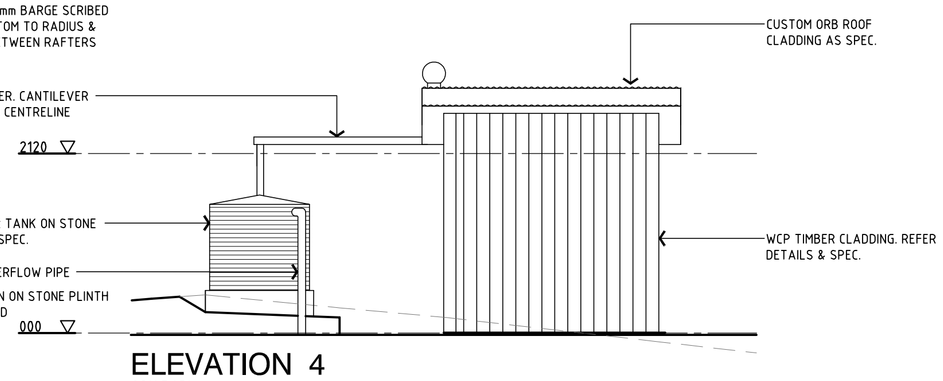

ELEVATION 4
SCALE 1:50

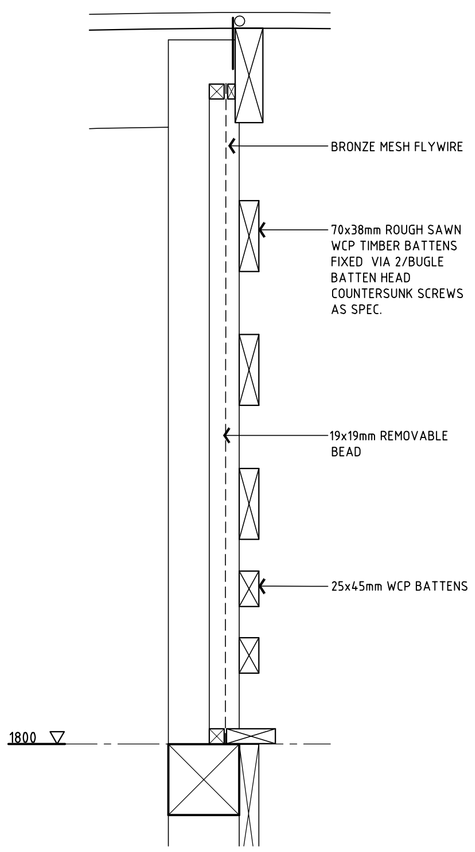

TYPICAL INSECT SCREEN SECTION
SCALE 1:10

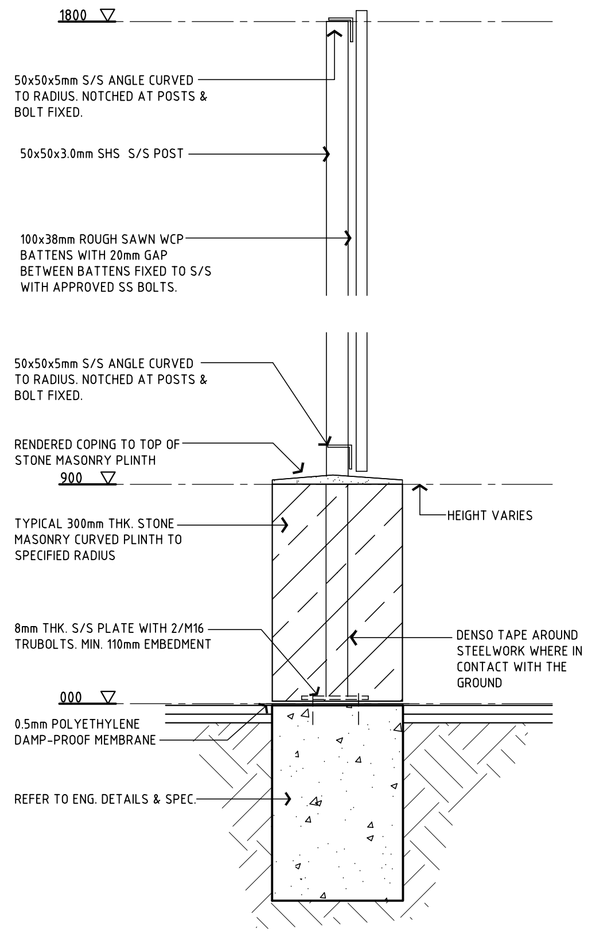

3 SECTION DETAIL
SCALE 1:10

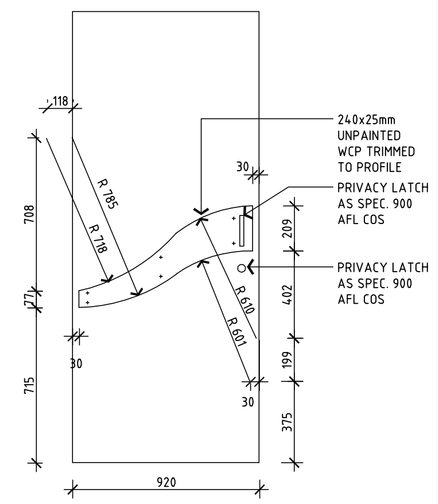

D1 DOOR DETAIL
SCALE 1:20

NOTE: D2 WILL BE WITHOUT WCP FEATURE

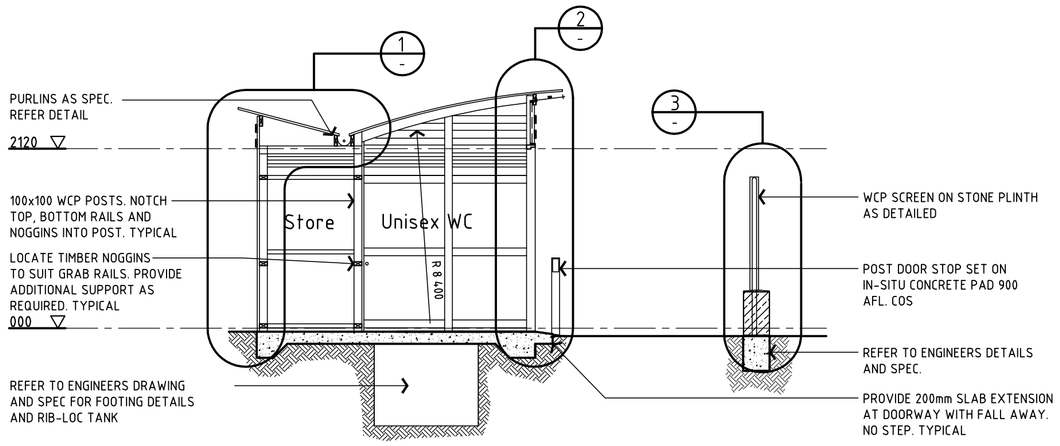

SECTION A A
SCALE 1:50

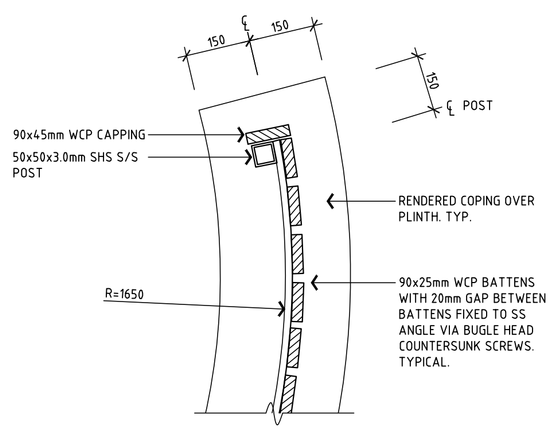

5 PLAN DETAIL
SCALE 1:10

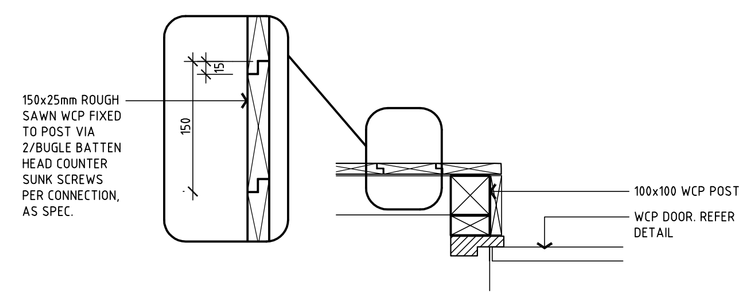

4 PLAN DETAIL
SCALE 1:10

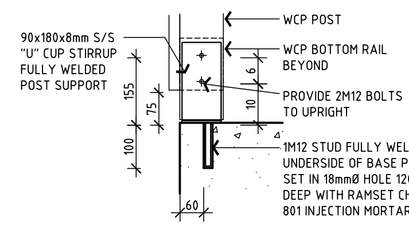

POST FIXING DETAIL

NOTES

GENERAL:

ALL SETTING OUT & ITEMS @ BOTH LOCATIONS TO BE CONFIRMED PRIOR TO CONSTRUCTION. PEG SITE FOR INSPECTION, ALLOW TO REPEG IF REQUIRED.

ALL STEEL-WORK & FIXINGS TO BE STAINLESS STEEL 316 GRADE

LOCATION & ORIENTATION OF BUILDING SCREENS & RAINWATER TANK ARE NOTIONAL.

THE LOCATION & LEVELS OF ALL ELEMENTS WILL BE DETERMINED ON SITE & APPROPRIATE DRAWING ISSUED.

ALLOW TO CUT & PREPARE SITE & LIFT FLOOR LEVEL 200mm NOTIONAL

MINIMAL CLEARANCE OF VEGETATION & NO VEGETATION SHALL BE REMOVED WITHOUT PERMISSION OF THE PROPRIETOR

TIMBER:

ALL TIMBER SHALL BE ROUGH SAWN FINISH WHITE CYPRESS PINE UNLESS OTHERWISE NOMINATED. NO SAPWOOD ALLOWED IN MEMBERS

ALL TIMBER TO BE UNPAINTED UNLESS OTHERWISE SPECIFIED

CHAMFER ALL SHARP EXPOSED EDGES

FASTENERS:

FIXINGS OF TIMBER SCREEN BATTENS TO TIMBER FRAMES SHALL BE BUGLE HEAD BATTEN SCREWS AS SPEC.

EXPOSED FIXINGS OF TIMBER SCREEN BATTENS TO STEEL SCREENS SHALL BE VIA BOLTS TO APPROVAL

LEGEND

WCP	ROUGH SAWN WHITE CYPRESS PINE, REFER DRAWING & SPEC. FOR SIZES
WRC	WESTERN RED CEDAR PLANE ALL ROUND, REFER DRAWING & SPEC. FOR SIZES
VP	150mmØ PAINTED PVC VENT PIPE WITH TURBO VENT AS SPECIFIED
IP	100mmØ BRASS INSPECTION POINT OPENING TO RIB-LOC COVER AS SPECIFIED.

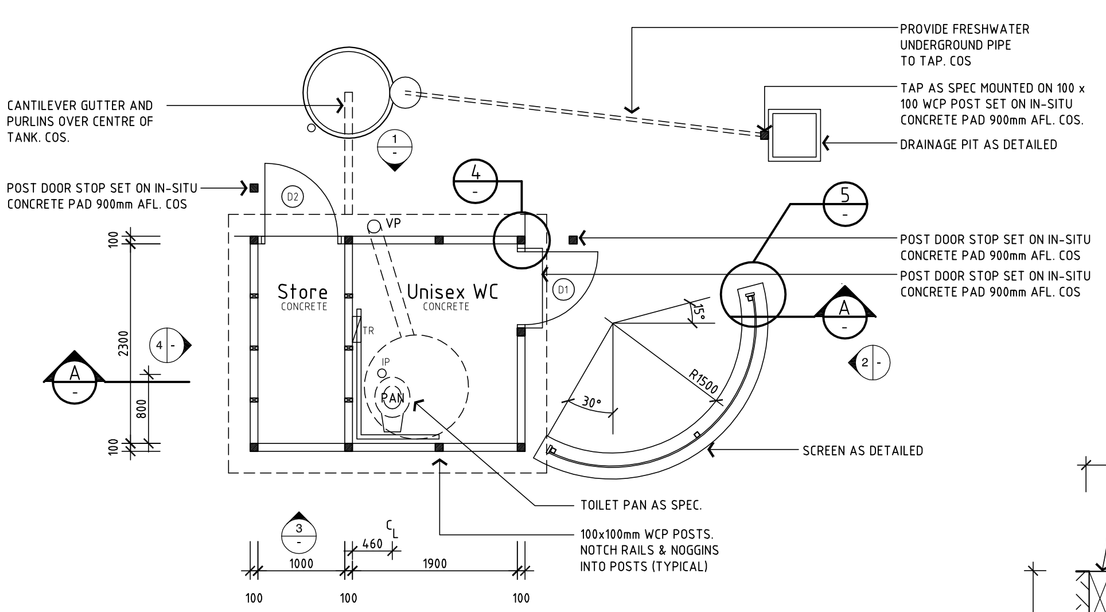

FLOOR PLAN
SCALE 1:50

Scale 0 .50 1 2 3 1:50

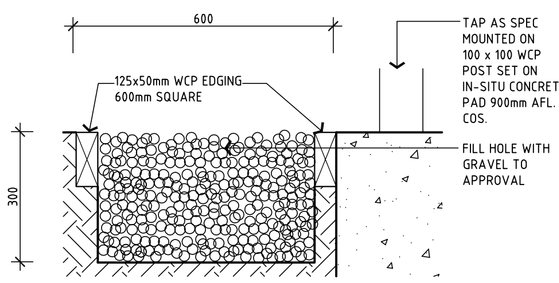

DRAINAGE PIT SECTION DETAIL
SCALE 1:10

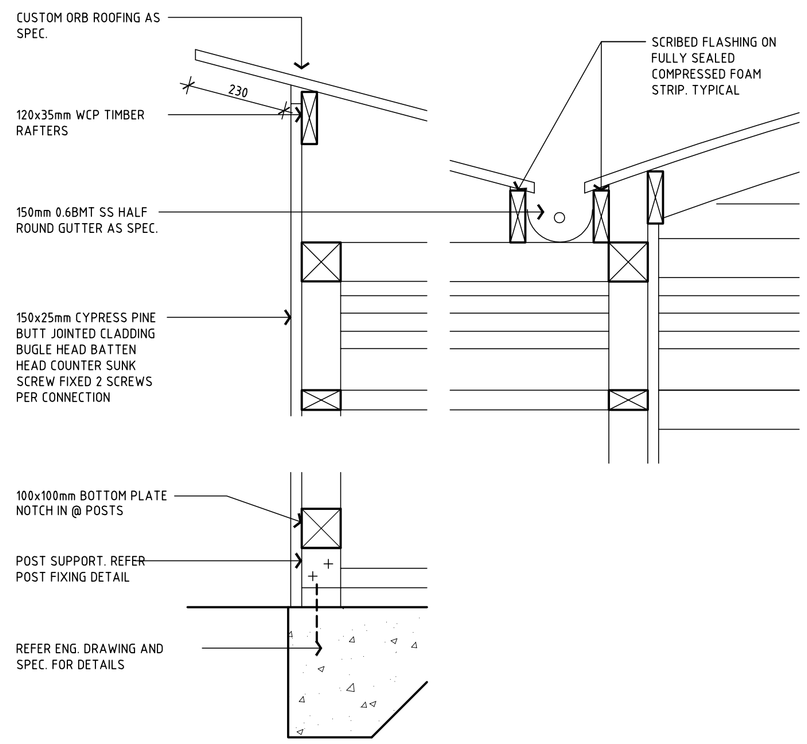

1 SECTION DETAIL
SCALE 1:10

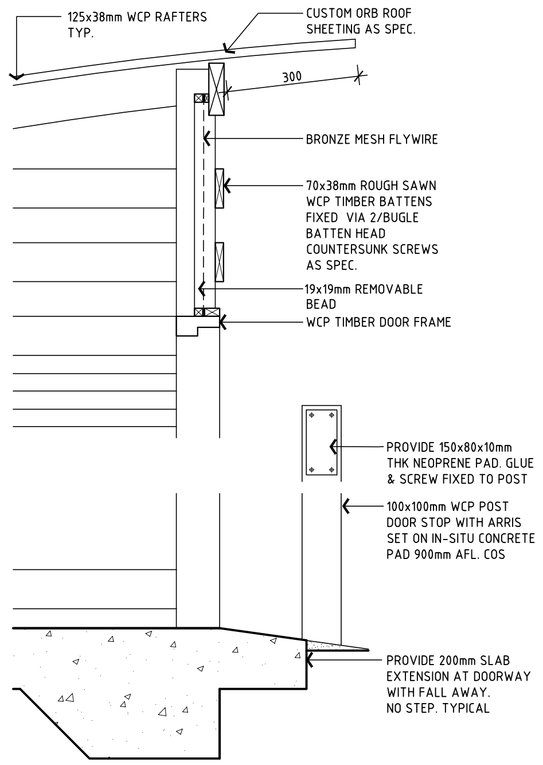

2 SECTION DETAIL
SCALE 1:10

Issue	Date	Revision/Description	Drawn	Appvd
A	02/10/08	REVISION 'A'	MW	

SHANNON ARCHITECTS

PROPOSED VISITORS FACILITIES FOR KANGAROO ISLAND COUNCIL

SCALES AS SHOWN DRAWN MW DATE 02/10/08

DRAWING SITE PLAN, PLAN, ELEVATIONS, SECTIONS, & DETAILS

DRAWING No 08001-1 A

43 Glen Osmond Road Eastwood SA 5063 Telephone 08 8373 1611 Facsimile 08 8373 1644

© RJ Shannon Pty Ltd ACN 007 998 067

AS COPYRIGHT OF ALL DRAWINGS AND DOCUMENTS AND OF THE WORKS EXECUTED FROM THEM IS VESTED IN THE ARCHITECT. THE USE THEREOF IS RESTRICTED TO THE PRESENT EXTENT INDICATED FOR THE PARTICULAR PROJECT AND TO THE SITE FOR WHICH AND TO THE PERSON FOR WHOM THEY WERE ORIGINALLY PREPARED. USE OTHERWISE THAN IN ACCORDANCE HEREWITH IS PROHIBITED. BUILDER MUST VERIFY ALL DIMENSIONS AT JOB BEFORE COMMENCING WORK OR SHOP DRAWINGS.