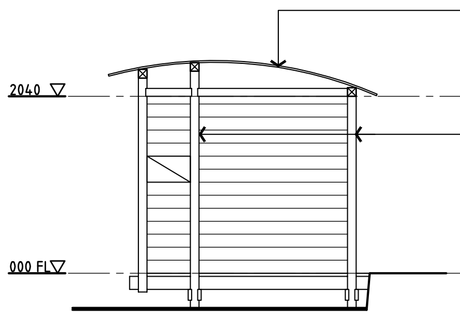

ELEVATION 1
SCALE 1:50

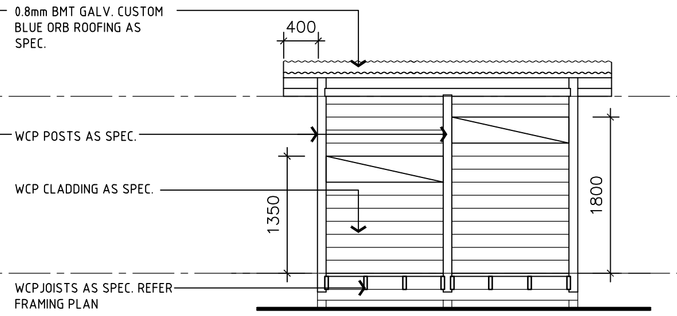

ELEVATION 2
SCALE 1:50

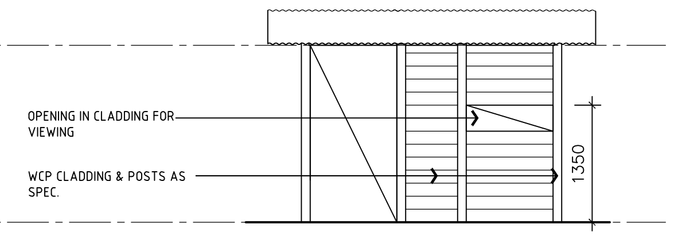

ELEVATION 3
SCALE 1:50

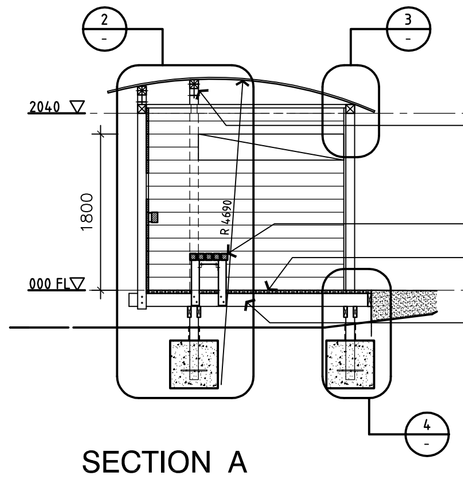

SECTION A
SCALE 1:50

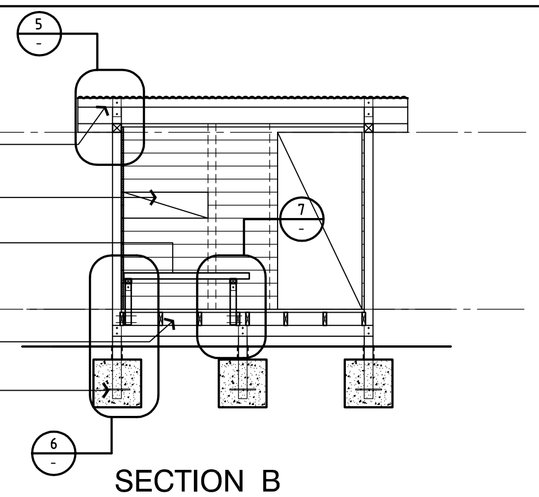

SECTION B
SCALE 1:50

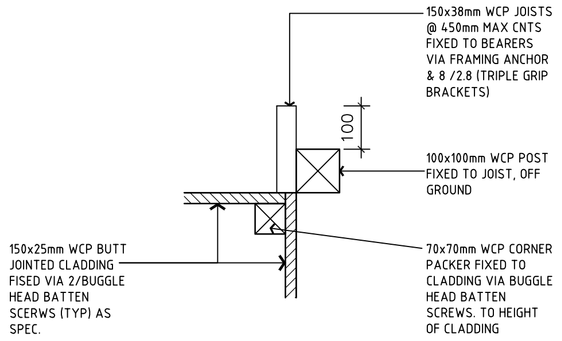

1 DETAIL
SCALE 1:10

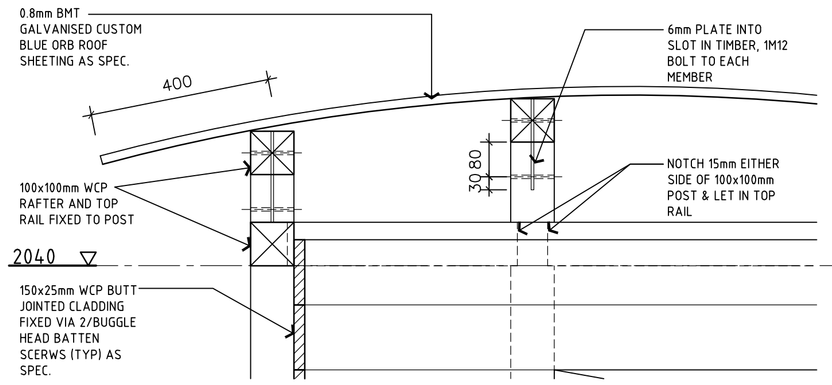

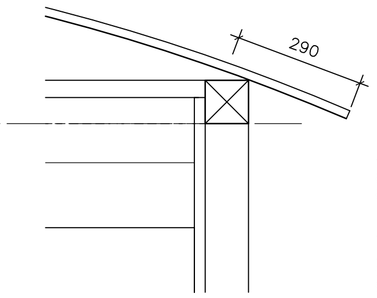

3 DETAIL
SCALE 1:10

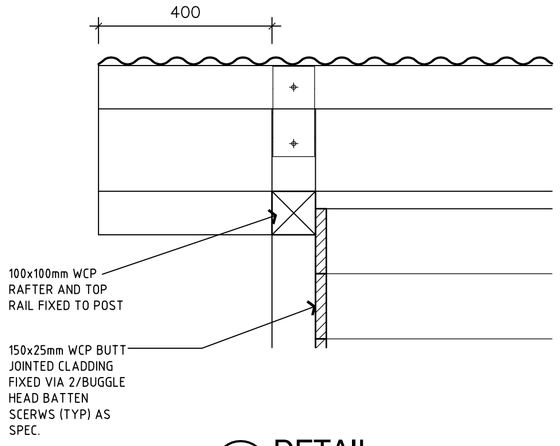

5 DETAIL
SCALE 1:10

Floor Framing Schedule			
LEGEND	MEMBER	MEMBER SIZE	NOTES
P1	POST	100x100mm WCP	
PA1	PAD	550x550x550mm(deep) SAND SOIL	20Mpa

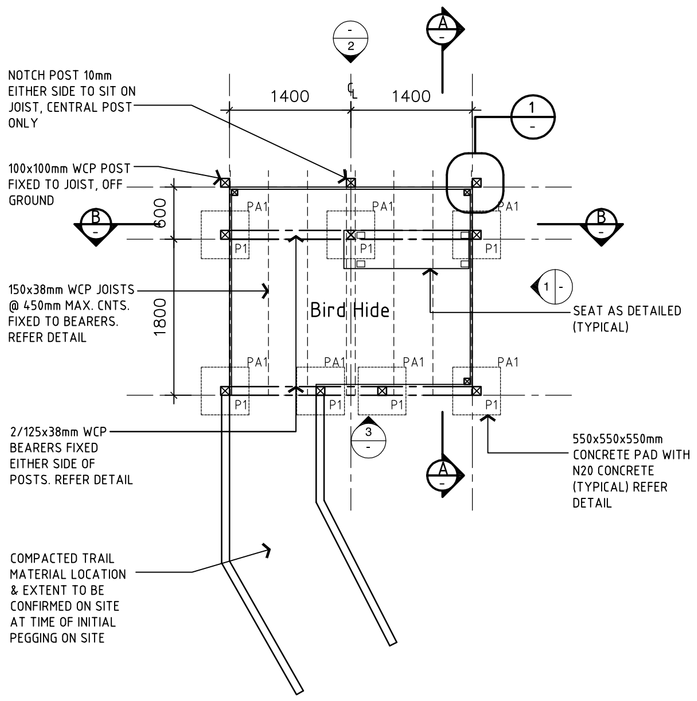

FLOOR & FRAMING PLAN
SCALE 1:50

0 .50 1 2 3
Scale 1:50

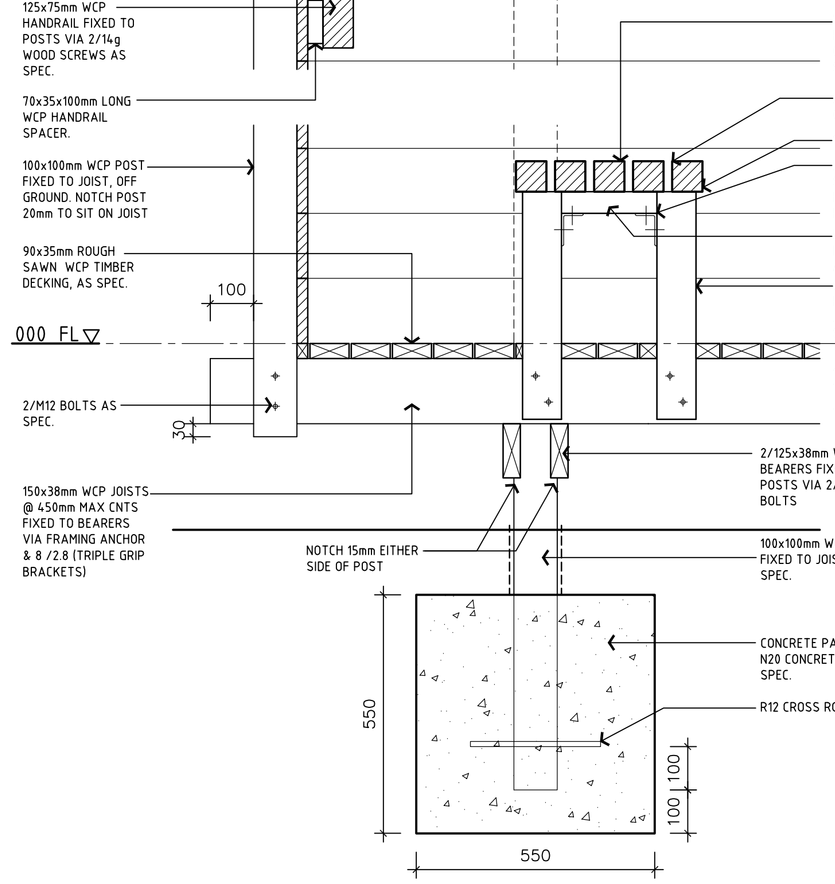

2 DETAIL
SCALE 1:10

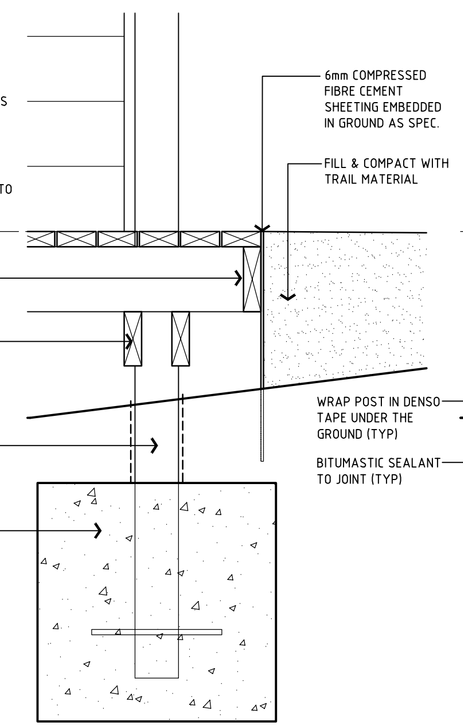

4 DETAIL
SCALE 1:10

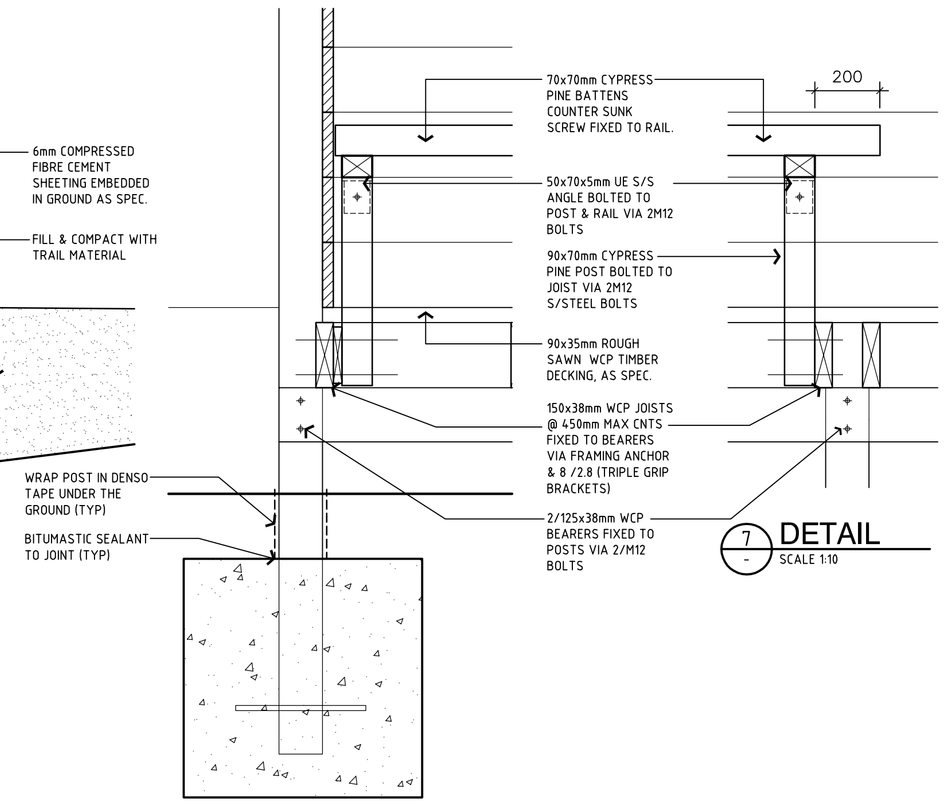

7 DETAIL
SCALE 1:10

6 DETAIL
SCALE 1:10

LEGEND

WCP WHITE CYPRESS PINE TIMBER AS SPECIFIED
S/S STAINLESS STEEL AS SPECIFIED

GENERAL NOTES

1. PEG LOCATION OF ALL SITES FOR SINGLE INSPECTION PRIOR TO WORK COMMENCING. ALLOW FOR RE-PEG IF REQUIRED
2. MINIMAL CLEARANCE OF VEGETAION & NO VEGETATION SHALL BE REMOVED WITHOUT PERMISSION OF THE PROPRIETOR

TIMBER

1. ALL TIMBER SHALL BE ROUGH SAWN WHITE CYPRESS PINE AS SPECIFIED.
2. ALL TIMBER TO BE UNPAINTED UNLESS NOTED OTHERWISE, & NO SAPWOOD ALLOWED IN MEMBERS.

FASTENERS

1. ALL FASTENERS TO BE STAINLESS STEEL
2. ALL STEEL WORK TO BE STAINLESS STEEL

Issue	Date	Revision/Description	Drawn	Appvd
A	11.07.05	DESIGN DEVELOPMENT	JL	

SHANNON ARCHITECTS

PROPOSED VISITORS FACILITIES FOR KANGAROO ISLAND COUNCIL

SCALES AS SHOWN DRAWN JL DATE JUL 11 PLOT DATE

DRAWING SITE PLAN, FLOOR PLAN, ELEVATIONS, SECTIONS

PATH CAD FILE

DRAWING No 04051-3 A

54 Prospect Rd Prospect SA 5082 Facsimile 08 8344 2913 Telephone 08 8344 2933

© RJ Shannon Pty Ltd ACN 007 998 067

AS COPYRIGHT OF ALL DRAWINGS AND DOCUMENTS AND OF THE WORKS EXECUTED FROM THEM IS VESTED IN THE ARCHITECT. THE USE THEREOF IS RESTRICTED TO THE PRESENT EXTENT INDICATED FOR THE PARTICULAR PROJECT AND TO THE SITE FOR WHICH AND TO THE PERSON FOR WHOM THEY WERE ORIGINALLY PREPARED. USE OTHERWISE THAN IN ACCORDANCE HEREWITH IS PROHIBITED. BUILDER MUST VERIFY ALL DIMENSIONS AT JOB BEFORE COMMENCING WORK OR SHOP DRAWINGS.